RF & MICROWAVE TECHNOLOGY

Model 5690 Multi-Tune Filter
1.5 - 30MHz

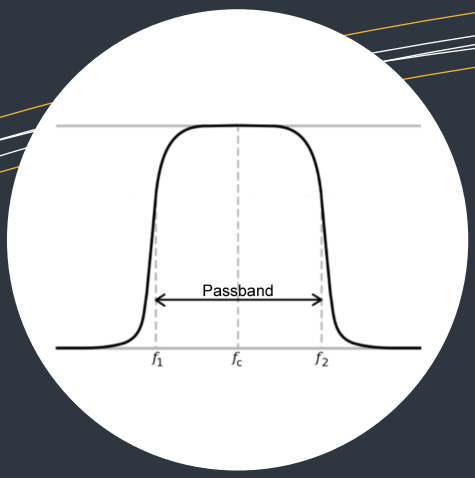

FEATURES

Netcom's 5690 is a tunable frequency range filter.

Unlike a regular tunable bandpass filter, where only the center frequency is adjustable, the Multi-Tune filter is a digitally programmable filter with adjustable passband between any f1 and f2 frequencies.

f1 and f2 are independently tuned at any frequency, forming a filter which has a completely adjustable center frequency and bandwidth.

This filter is offered in a small integrated SMT package to support applications where compact design, power requirements, and board layout flexibility are important.

The following table shows the typical performance of the filter.

Specifications

Frequency Range	1.5 to 30 MHz
Passband *	f1 to f2
Center Frequency	(f1 + f2) / 2
Impedance (Input /Output) - Typical	50 Ω
f1 - 5% Rejection	Between -4.5dB (max) and –6.5dB
f2 + 5% Rejection	Between -4.5dB (max) and –9dB
f1 - 10% Rejection	Between -11dB (max) and –14dB
f2 + 10% Rejection	Between -11dB (max) and –17dB
f1 - 20% Rejection	< -30dB
f2 + 20% Rejection	< -29dB
Tuning Speed	< 50 µs
Passband Insertion Loss (max) over wideband at Ambient Temperature	< -4dB
Passband Insertion Loss for narrow bandwidth (f1=f2) at Ambient Temperature	-6.5dB
Passband Return Loss	Between -6dB and -10dB
Tuning Resolution (f1 / f2)	100KHz (min)
P1dB 1.5MHz to 4MHz	29dBm
P1dB 4MHz to 30MHz	30dBm
Max Power	30dBm
IP3 1.5MHz to 4MHz	38dBm
IP3 4MHz to 11MHz	43dBm
IP3 11MHz to 30MHz	48dBm
Estimated Spurious Level	-124dBm
DC Voltage	3.3 Volts
DC Current Max	50 mA
Operating Temperature Range	-40 to +85°C
Control Interface	SPI Input
Dimensions	2.2 x 2.2 x 0.5 inches 55.88 x 55.88 x 12.70 mm

**f1 and f2 are any frequencies between 1.5MHz to 30MHz with f1 ≤ f2.*

RoHS COMPLIANT

Mechanical

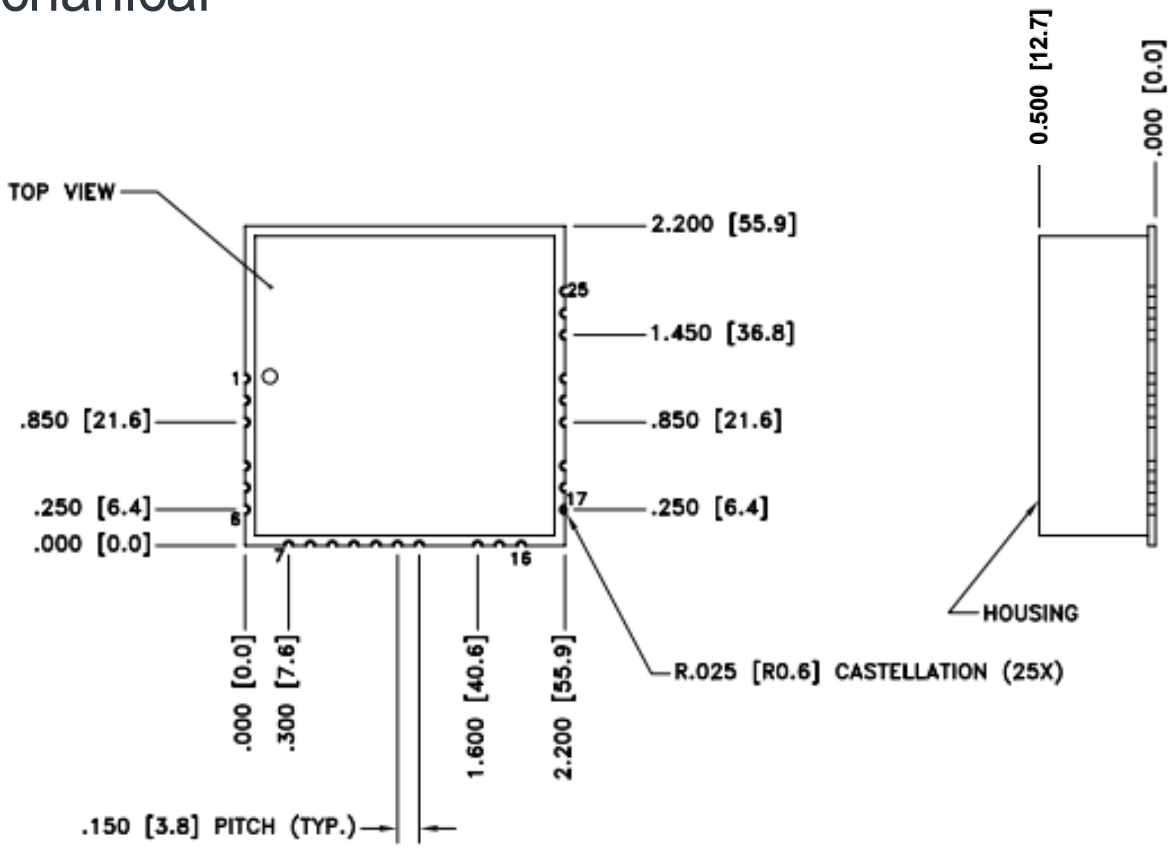

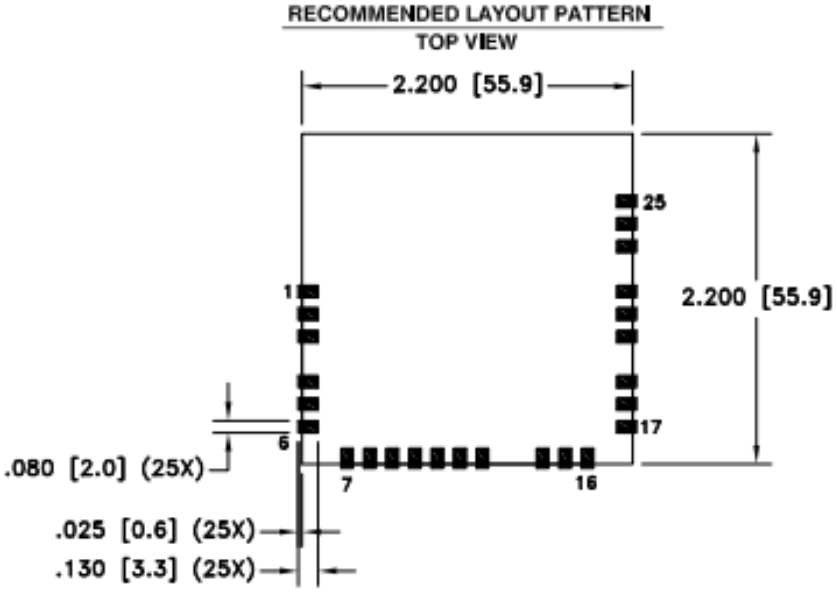

PIN DESIGNATORS				
PIN NUMBER	DESCRIPTION		PIN NUMBER	DESCRIPTION
1	GND		14	GND
2	RF_IN		15	SPI_CLK
3	GND		16	SPI_MOSI
4	GND		17	SPI_CS
5	NC		18	NC
6	NC		19	GND
7	TUNE_READY		20	GND
8	NC		21	RF_OUT
9	NC		22	GND
10	NC		23	GND
11	NC		24	VCC (+3.3V)
12	SPI_MISO		25	GND
13	GND			

NOTES:
1. TOLERANCES ±.010 [0.25] UNLESS OTHERWISE SPECIFIED.
2. DIMENSIONS ARE INCHES [mm].

Response Plots

Typical Performance f1=1.5MHz, f2 from 1.5 to 30MHz

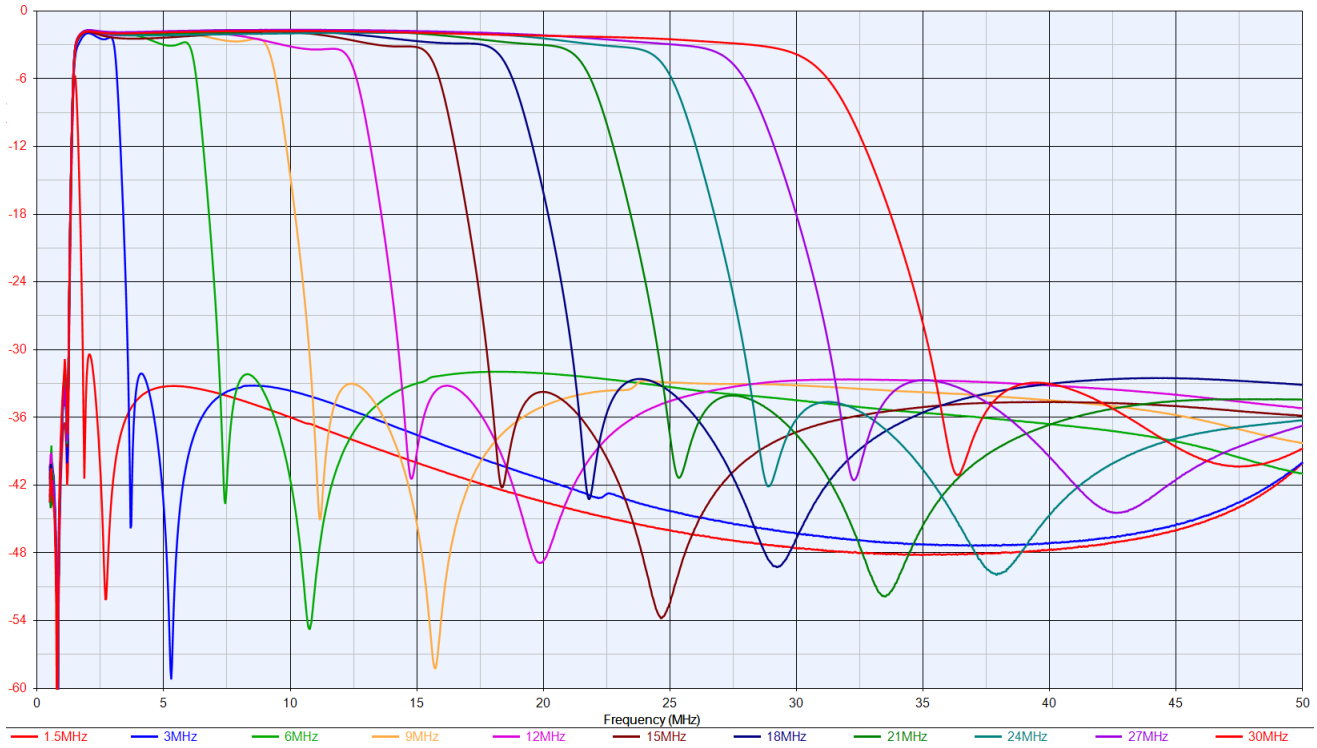

Typical Performance f1 from 1.5 to 30MHz, f2 = 30MHz

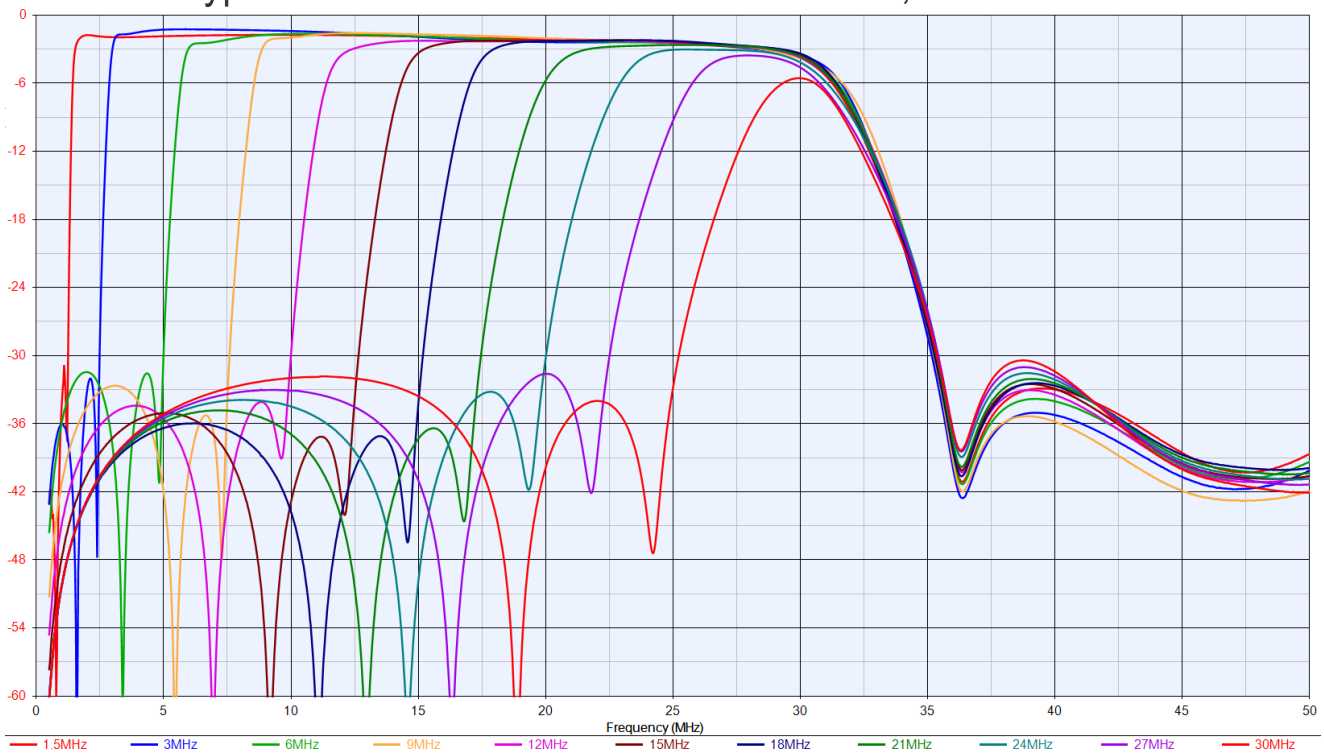

Response Plots (cont.)

Narrowband Typical Performance f1=f2 from 1.5 to 30MHz

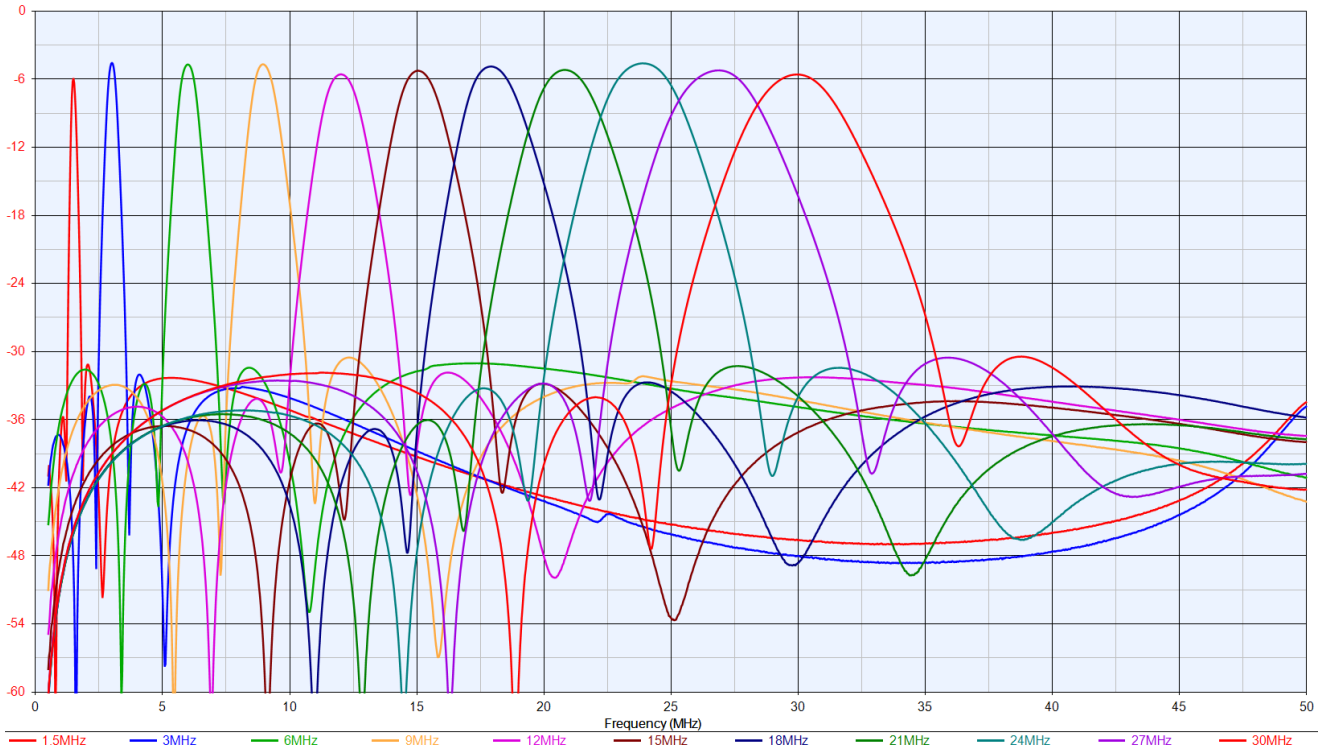

Serial Address Input Timing Diagram

Tuning addresses start at 15 decimal (1.5MHz) and end at 300 decimal (30MHz) in 100KHz increments for the Low Pass and High Pass address. Each decimal step represents a 100KHz frequency step increase or decrease. The Low Pass filter must be set at a higher frequency address than the High Pass filter frequency address . Tuning of the filter starts when the last data clock (32nd) pulse of the address is sent to the unit while the CS (Chip Select) is low.

Symbol	Parameter	Min	Max	Units
tSS	Setup time MOSI Data to SCLK*	50		ns
tu	Hold Time MOSI Data From SCLK		0	ns
tCH	Clock High Time	125		ns
tCP	Clock Period	250		ns
tCS	Chip Setup Time (CS falling edge to SCLK start)	125		ns
tTR	Tune Ready indicator***		100	us
tACC	Access time from Last (32nd) SCLK edge to Fo**		100	us

* Data clocked in on SCLK leading edge.
** Filter tunes to address on last clock bit of address SCLK.
*** Tune Ready at logic low when filter processing tuned address.

Device Commands and Addressing

The 5690 is designed to interface directly to the Serial Peripheral Interface (SPI) interface. The instructions and Addressing are listed in the table below. All instructions, addresses, and data are transferred with the MSB first and start with a High to Low transition if the SPI_CS line.

Instruction Name	Instruction Format	Operates On	Operation Description
LOW PASS ADDRESS	0000 0000 0000 1111 - 0000 0001 0010 1100	Unit Address Register	Set Low Pass Address xh000F – xh012C (2)
HIGH PASS ADDRESS	1001 0000 0000 1111 - 1001 0001 0010 1100	Unit Address Register	Set High Pass Address Xh900F – xh912C (3)
READ UNIT ID	1011 0100 0000 0000	Unit ID Register	Read 4-digit Unit ID code (ASCII)
READ UNIT FW CODE	1101 1100 0000 0000	Unit FW Register	Read FW code 4-letter code (ASCII)
READ UNIT PRODUCTION DATE	1111 1110 0000 0000	Unit Date Register	Read 4-digit Unit Date Code (ASCII)

LOW PASS ADDRESS: The 5690 Multi-Tune Filter will tune the Low Pass filter cutoff when the address in the range of 15 (decimal) to 300 (decimal) is clocked into the filter. Note: The Low pass frequency must be tuned Higher than the High Pass tuned frequency.

HIGH PASS ADDRESS: The 5690 Multi-Tune Filter will tune the High Pass filter cutoff when the address in the range of 15 (decimal) to 300 (decimal) is clocked into the filter. Note: The High pass frequency must be tuned lower than the Low Pass tuned frequency.

READ UNIT ID: The 5690 Multi-Tune Filter will send a 4-digit ID “5690” in ASCII code when the command is sent to the unit. The unit will stay at the last tune channel when the command is sent.

READ UNIT FW CODE: The 5690 Multi-Tune Filter will send a 4-digit Firmware ID in ASCII code when the command is sent to the unit. The unit will stay at the last tune channel when the command is sent.

READ UNIT PRODUCTION DATE: The 5690 Multi-Tune Filter will send a 4-digit date in MMYY format in ASCII code when the command is sent to the unit. The unit will stay at the last tune channel when the command is sent.

Device Command Timing

5690 LOW PASS ADDRESS TIMING

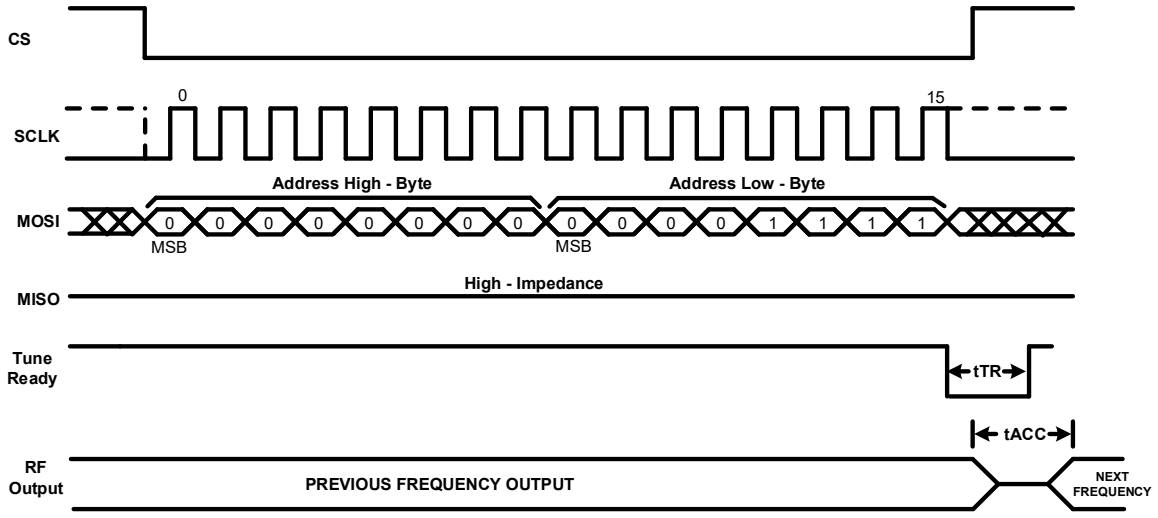

Note: Address 15 (1.5MHz) shown as an example

5690 HIGH PASS ADDRESS TIMING

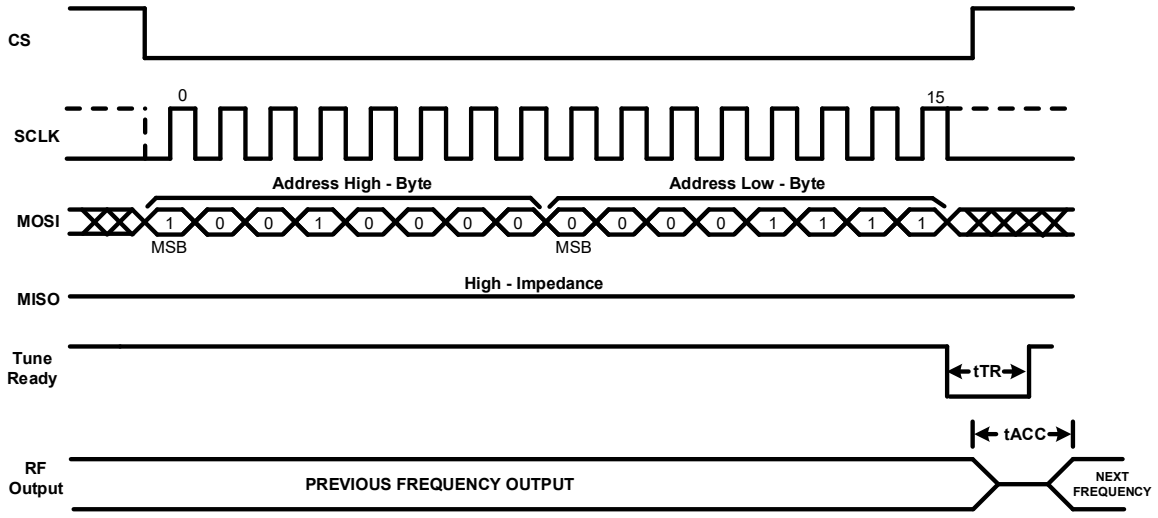

Note: Address 15 (1.5MHz) shown as an example

Device Command Timing

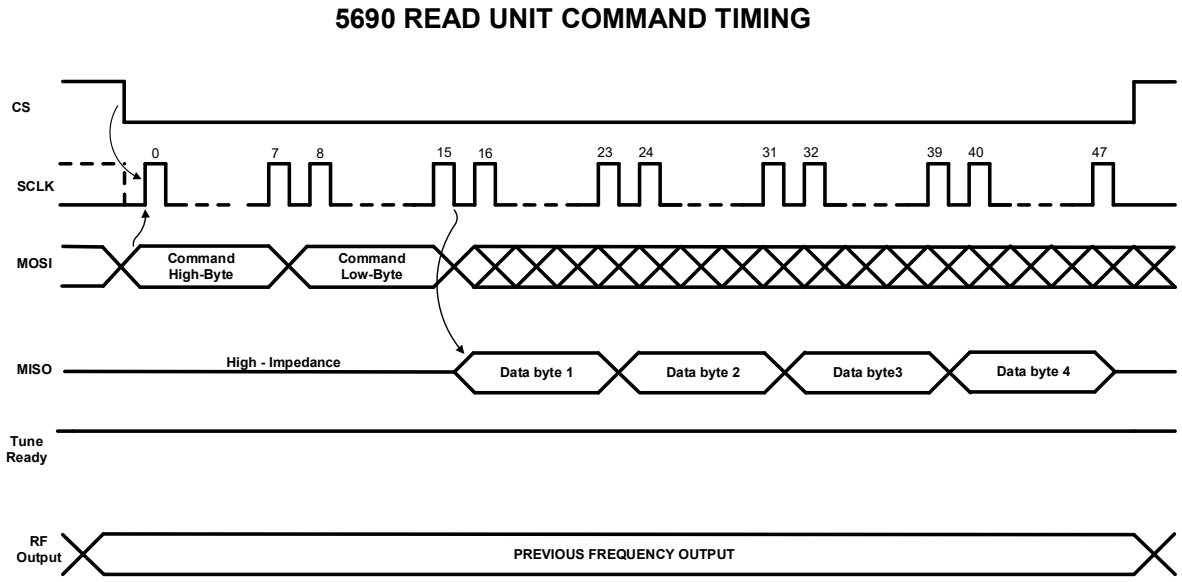

The Read Unit Command Timing applies to the following commands:

- **Read Unit ID**
- **Read Unit FW Code**
- **Read Unit Production Date**

Environmental Specification Standards

Lead Plating:

- ELECTROLESS NICKEL, TYPE 1, CLASS 1, Cu/Ni P7, 100 MICRO INCHES (0.0001 INCHES) MINIMUM, IMMERSION GOLD PLATE 2 TO 6 MICRO INCHES (0.000002 TO 0.000006 INCHES) ON OUTER LAYERS.

Temperature:

- High temperature shall meet MIL-STD-810E, Method 501.3, Procedure I to 85°C storage, and procedure II to 85°C operating.
- Low temperature shall meet Method 502.3, Procedure I to -57°C storage, and Procedure II to -40°C operating.

Vibration:

- MIL-STD-810E Method 514.4 Ground Mobile Test Procedure I, Test Condition I - 3.4.7

Shock:

- MIL-STD-810E Procedure I, Method 516.4 - Functional Shock.

Reflow:

- Hand solder.

Cleaning:

- Recommend cleaning solvents used which meet ODC (Ozone Depleting Chemical) requirements.
- Solvents containing methylene chloride or other epoxy solvents should be avoided since these will attack the epoxy encapsulation material of some components.
- Ultrasonic cleaning not recommended.

Moisture Sensitivity Level:

- MSL 3

Ordering Information

Model Number	(-)	Options	Add "-EB" for Unit Mounted on Evaluation Board	
5690	(-)		(-)	EB

Options:

Corresponding Evaluation Board

Netcom's 5690 is a tunable High Pass/Low Pass filter that can be tuned over the frequency range of 1.5MHz to 30MHz.

The EB5680 Evaluation Board is designed to test and evaluate Netcom's Model 5690 Frequency Agile Filter. The evaluation board is used to supply power to the filter, provide tuning control, facilitate measurement of the filter's RF parameters, and switching speed.

Tuning control of the filter is provided by the EB5680 Evaluation Board by a USB module and user interface program to provide frequency tuning control for the 5690 tunable filter. The EB5680 Evaluation Board includes a separate RF thru path for calibration of test equipment to improve the accuracy of RF measurements.

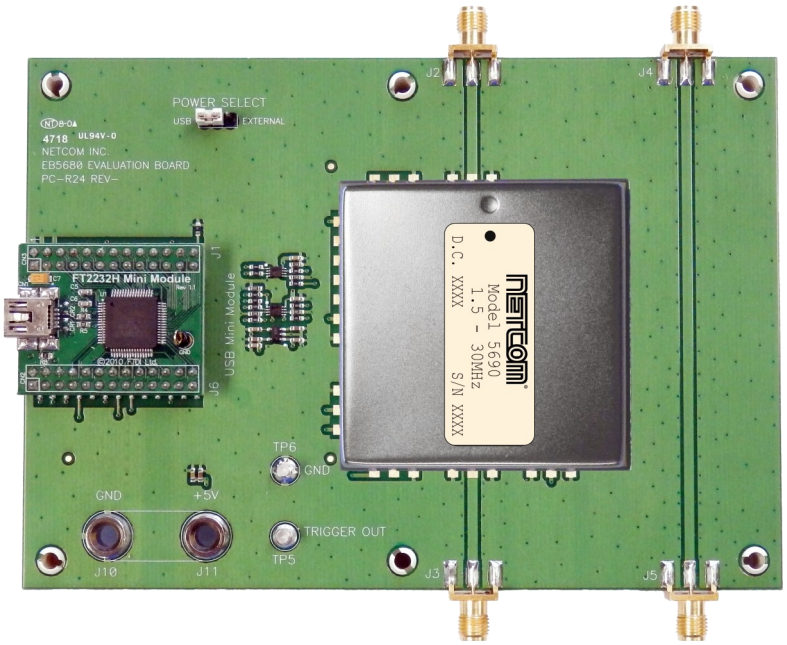

RF & MICROWAVE TECHNOLOGY

599 Wheeling Road
Wheeling, IL 60090
USA
Phone 847.537.6300
Fax 847.537.2700
www.netcominc.com